| LTR | ECO | RELEASE DATE / BY |
|---|---|---|
| A | 30238 | 01–19–2015 LNP |
| B | 50531 | 05–27–2016 LNP |
| C | 50826 | 2016–12–15 LNP |

| REF | ITEM NO. | DRAWING NO. | DESCRIPTION / MODEL | |
|---|---|---|---|---|
| 76 | 122403–3 | | AXIAL PROBE | SAC81–1208–30 |
| 75 | 122403–1 | | AXIAL PROBE | SAC81–1208–10 |
| 74 | 122402–3 | | AXIAL PROBE | SAC81–1204–30 |
| 73 | 122402–1 | | AXIAL PROBE | SAC81–1204–10 |
| 72 | 122401–3 | | AXIAL PROBE | SAD81–0608–30 |
| 71 | 122401–1 | | AXIAL PROBE | SAD81–0608–10 |
| 70 | 122400–3 | | AXIAL PROBE | SAD81–0604–30 |
| 69 | 122400–1 | | AXIAL PROBE | SAD81–0604–10 |
| 68 | 122359–4 | | TRANSVERSE PROBE | FTM81–0215–30–T |
| 67 | 122359–3 | | TRANSVERSE PROBE | FTM81–0215–30 |
| 66 | 122359–2 | | TRANSVERSE PROBE | FTM81–0215–10–T |
| 65 | 122359–1 | | TRANSVERSE PROBE | FTM81–0215–10 |
| 64 | 122358–4 | | TRANSVERSE PROBE | FTF81–0215–30–T |
| 63 | 122358–3 | | TRANSVERSE PROBE | FTF81–0215–30 |
| 62 | 122358–2 | | TRANSVERSE PROBE | FTF81–0215–10–T |
| 61 | 122358–1 | | TRANSVERSE PROBE | FTF81–0215–10 |
| 60 | 122357–4 | | AXIAL PROBE | FAM81–1815–30–T |
| 59 | 122357–3 | | AXIAL PROBE | FAM81–1815–30 |
| 58 | 122357–2 | | AXIAL PROBE | FAM81–1815–10–T |
| 57 | 122357–1 | | AXIAL PROBE | FAM81–1815–10 |
| 56 | 122356–4 | | AXIAL PROBE | FAF81–1815–30–T |
| 55 | 122356–3 | | AXIAL PROBE | FAF81–1815–30 |
| 54 | 122356–2 | | AXIAL PROBE | FAF81–1815–10–T |
| 53 | 122356–1 | | AXIAL PROBE | FAF81–1815–10 |
| 52 | 122350–4 | | TR THIN FILM PROBE | STD81–0205–30 |
| 51 | 122350–3 | | TR THIN FILM PROBE | STD81–0205–10 |
| 50 | 122350–2 | | TR THIN FILM PROBE | STD81–0203–30 |
| 49 | 122350–1 | | TR THIN FILM PROBE | STD81–0203–10 |
| 48 | 122340 | | HIGH FIELD TR PROBE | HTR81–0608–10 |
| 47 | 122339 | | HIGH FIELD AX PROBE | SAR81–1908–10 |
| 46 | 122338 | | HIGH FIELD AX PROBE | HAR81–2508–10 |
| 45 | 122347 | | HIGH FREQ TR PROBE | STD81–0404–10 |
| 44 | – | | – | – |
| 43 | 122342–3 | | MAGNA PROBE | MOX81–2506–30 |
| 42 | 122342 | | MAGNA PROBE | MOX81–2506–10 |
| 41 | 122341–3 | | LOW FIELD PROBE | MOS81–3204–30 |
| 40 | 122341 | | LOW FIELD PROBE | MOS81–3204–10 |
| 39 | 122336 | | CRYOGENIC AX PROBE | CAP81–2560–10 |
| 38 | 122334 | | CRYOGENIC TR PROBE | CTP81–3260–10 |
| 37 | – | | – | – |
| 36 | 122315 | | AXIAL PROBE | SAM81–1908–10–T |
| 35 | 122314 | | AXIAL PROBE | SAM81–1908–10 |
| 34 | 122313 | | AXIAL PROBE | SAM81–1904–10–T |
| 33 | 122312 | | AXIAL PROBE | SAM81–1904–10 |
| 32 | 122335 | | AXIAL PROBE | SAF81–1902–10–T |
| 31 | 122311 | | AXIAL PROBE | SAF81–1908–10–T |
| 30 | 122310 | | AXIAL PROBE | SAF81–1908–10 |
| 29 | 122309 | | AXIAL PROBE | SAF81–1904–10–T |
| 28 | 122308 | | AXIAL PROBE | SAF81–1904–10 |
| 27 | 122307 | | AXIAL PROBE | HAM81–2508–10–T |
| 26 | 122306 | | AXIAL PROBE | HAM81–2508–10 |
| 25 | 122305 | | AXIAL PROBE | HAM81–2504–10–T |
| 24 | 122304 | | AXIAL PROBE | HAM81–2504–10 |
| 23 | 122303 | | AXIAL PROBE | HAF81–2508–10–T |
| 22 | 122302 | | AXIAL PROBE | HAF81–2508–10 |
| 21 | 122301 | | AXIAL PROBE | HAF81–2504–10–T |
| 20 | 122300 | | AXIAL PROBE | HAF81–2504–10 |
| 19 | 122337 | | Changed FTM81–0215–10–T p/n to 122359–2 (REF 66) | |
| 18 | 122333 | | TRANSVERSE PROBE | STF81–0204–10–T |
| 17 | 122332 | | TRANSVERSE PROBE | STF81–0204–10 |
| 16 | 122331 | | TRANSVERSE PROBE | STM81–0404–10–T |
| 15 | 122330 | | TRANSVERSE PROBE | STM81–0404–10 |
| 14 | 122329 | | TRANSVERSE PROBE | STM81–0402–10–T |
| 13 | 122328 | | TRANSVERSE PROBE | STM81–0402–10 |
| 12 | 122327 | | TRANSVERSE PROBE | STF81–0404–10–T |
| 11 | 122326 | | TRANSVERSE PROBE | STF81–0404–10 |
| 10 | 122325–3 | | TRANSVERSE PROBE | STF81–0402–30–T |
| 9 | 122325 | | TRANSVERSE PROBE | STF81–0402–10–T |
| 8 | 122324 | | TRANSVERSE PROBE | STF81–0402–10 |
| 7 | 122323 | | TRANSVERSE PROBE | HTM81–0608–10–T |
| 6 | 122322 | | TRANSVERSE PROBE | HTM81–0608–10 |
| 5 | 122321 | | TRANSVERSE PROBE | HTF81–0608–10–T |
| 4 | 122320 | | TRANSVERSE PROBE | HTF81–0608–10 |
| 3 | 122319 | | TRANSVERSE PROBE | HTF81–0604–10–T |
| 2 | 122318 | | TRANSVERSE PROBE | HTF81–0604–10 |
| 1 | | U2–6277 | SCHEMATIC, 8000 SERIES PROBES | |

UNLESS OTHERWISE SPECIFIED:
DIMENSIONS IN INCHES
(DO NOT SCALE TO DWG)

THIS DRAWING IS THE PROPERTY OF OECO / F.W. BELL AND MAY NOT BE COPIED, USED OR DISCLOSED FOR ANY PURPOSE EXCEPT AS AUTHORIZED IN WRITING BY OECO / F.W. BELL

| | | | |
|---|---|---|---|
| SCALE | NONE | DRN | 07–16–09 GG |
| DEC± | .005 | APPD | 10–30–12 AVZ |
| FRAC± | – | QA APPD | 10–29–12 JSS |
| ANG± | – | REL | 10–29–12 LNP |

F.W. BELL

TITLE PROBE SPECIFICATIONS, 8000 SERIES GAUSSMETER

SHT 1 OF 9

DWG NO. U1-6276

REV C

## SPECIFICATIONS: TRANSVERSE PROBES

### 1.0 GENERAL DESCRIPTION

8000 SERIES TRANSVERSE PROBES ARE PRECISION, SEMICONDUCTOR MAGNETIC FIELD SENSORS DESIGNED FOR USE WITH F.W. BELL 8000 SERIES GAUSSMETERS TO PROVIDE STABLE AND REPEATABLE TRANSVERSE MAGNETIC FLUX DENSITY MEASUREMENTS.

THESE UNITS FEATURE RUGGEDIZED CONSTRUCTION SUITABLE FOR MANUAL OR FIXTURED APPLICATIONS.

### 2.0 ELECTRICAL AND PHYSICAL SPECIFICATIONS

2.1 FOR SPECIFICATION DETAILS REFER TO TABLE 1 ON PAGE 8.

2.2 ELECTRICAL SCHEMATIC : REF [1]

2.3 STORAGE TEMPERATURE RANGE : −25°C TO +75°C (−13°F TO +167°F)

### 3.0 CALIBRATION

3.1 CALIBRATION IS REFERENCED TO A LABORATORY STANDARD MAGNET. THIS STANDARD IS MEASURED BY THE NUCLEAR MAGNETIC RESONANCE (NMR) TECHNIQUE, WHICH IS BASED ON ACCEPTED VALUES OF NATURAL PHYSICAL CONSTANTS

3.2 PROBES ARE CALIBRATED TO INDICATED ACCURACY OVER THE SPECIFIED RANGES WHEN USED WITH THE APPROPRIATE F.W. BELL GAUSSMETER.

3.3 GAUSSMETER ERRORS MUST BE ADDED TO PROBE LINEARITY ERRORS TO OBTAIN OVERALL MEASURING ACCURACY.

### 4.0 SPECIAL PROBES

4.1 ELECTRICAL AND/OR PHYSICAL REQUIREMENTS NOT COVERED BY STANDARD PROBES MAY BE FURNISHED AS SPECIAL PROBES.

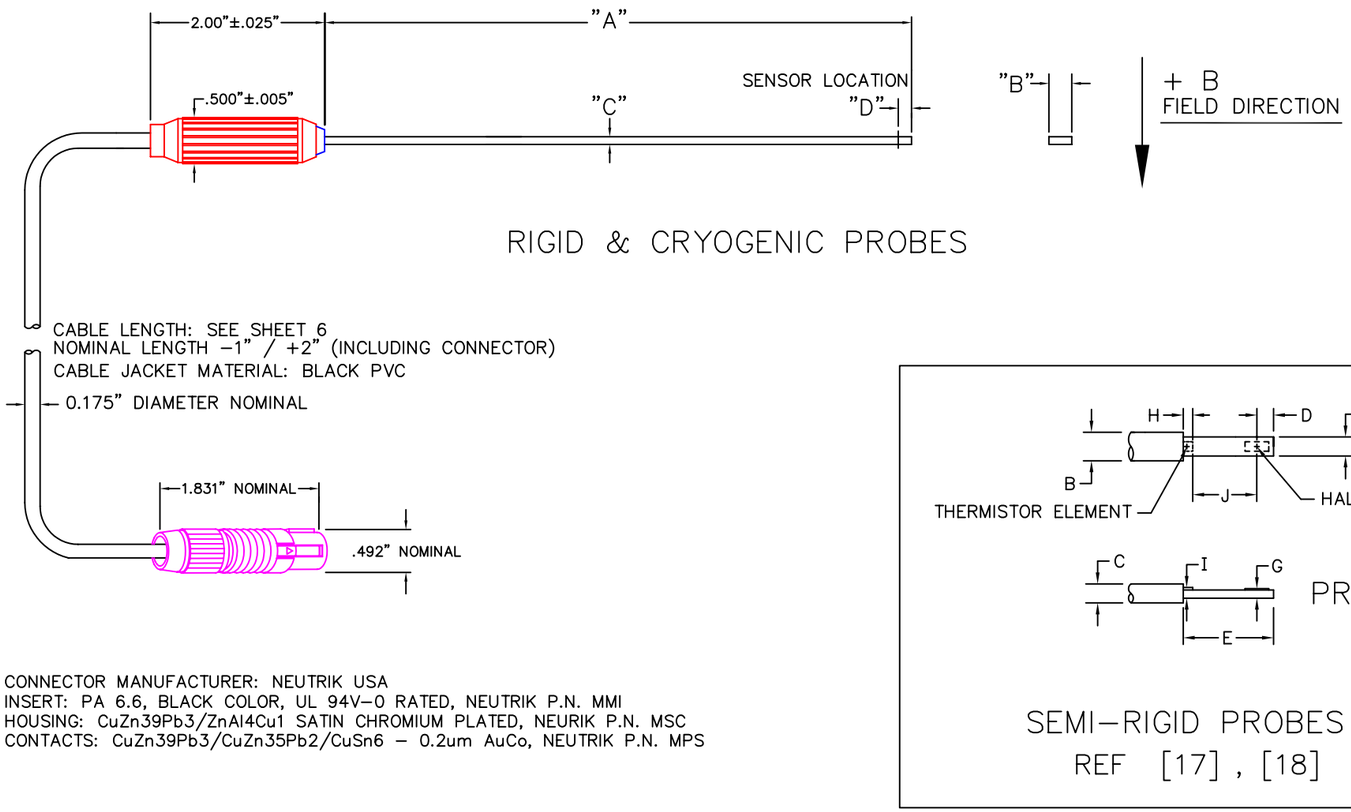


CONNECTOR MANUFACTURER: NEUTRIK USA
INSERT: PA 6.6, BLACK COLOR, UL 94V−0 RATED, NEUTRIK P.N. MMI
HOUSING: CuZn39Pb3/ZnAl4Cu1 SATIN CHROMIUM PLATED, NEURIK P.N. MSC
CONTACTS: CuZn39Pb3/CuZn35Pb2/CuSn6 − 0.2um AuCo, NEUTRIK P.N. MPS

FIGURE 1. TRANSVERSE PROBES.

| REF | QTY | ITEM NO. | DRAWING NO. | DESCRIPTION | | |
|---|---|---|---|---|---|---|
| | | F.W. BELL | | SHEET NO. 2 | DWG NO. U1-6276 | REV C |

SPECIFICATIONS: TRANSVERSE THIN FILM PROBES

1.0 GENERAL DESCRIPTION

8000 SERIES TRANSVERSE PROBES, WITH .005" (0.127) DIAMETER ACTIVE AREA, ARE PRECISION, SOLID STATE MAGNETIC FIELD SENSORS DESIGNED FOR USE WITH F.W. BELL 8000 SERIES GAUSSMETERS TO PROVIDE TRANSVERSE MAGNETIC FLUX DENSITY MEASUREMENTS IN NARROW GAPS OR CONFINED SPACES. ALTHOUGH THESE UNITS FEATURE RUGGEDIZED CONSTRUCTION SUITABLE FOR MANUAL OR FIXTURED APPLICATIONS, CAUTION SHOULD BE USED WHEN LOCATING THE PROBE TIP IN THE TEST LOCATION AS THE TIP OF THE STEM (KAPTON LEADSTRIP AND EXPOSED HALL SENSOR ELEMENT) ARE FRAGILE. DO NOT BEND THE FLEX STRIP WITHIN .06" OF THE HALL ELEMENT OR IT MAY BREAK THE SOLDER JOINTS.

2.0 ELECTRICAL AND PHYSICAL SPECIFICATIONS

2.1 FOR SPECIFICATION DETAILS REFER TO TABLE 1 SHOWN BELOW.

2.2 ELECTRICAL SCHEMATIC : REF [1]

2.3 OPERATING TEMPERATURE RANGE : 0°C TO +90°C (+32°F TO +194°F)

2.4 STORAGE TEMPERATURE RANGE : −25°C TO +90°C (−13°F TO +194°F)

3.0 CALIBRATION

3.1 CALIBRATION IS REFERENCED TO A LABORATORY STANDARD MAGNET. THIS STANDARD IS MEASURED BY THE NUCLEAR MAGNETIC RESONANCE (NMR) TECHNIQUE, WHICH IS BASED ON ACCEPTED VALUES OF NATURAL PHYSICAL CONSTANTS

3.2 PROBES ARE CALIBRATED TO INDICATED ACCURACY OVER THE SPECIFIED RANGES WHEN USED WITH THE APPROPRIATE F.W. BELL GAUSSMETER.

3.3 GAUSSMETER ERRORS MUST BE ADDED TO PROBE LINEARITY ERRORS TO OBTAIN OVERALL MEASURING ACCURACY.

4.0 NOTES

4.1 DUE TO THE HIGHER PROBE IMPEDANCE THE THIN FILM TECHNOLOGY HAS A HIGHER NOISE FLOOR THAN BULK TYPE PROBES. TYPICAL NOISE FLOOR IS AROUND 0.07G (7μT).

4.1 ALTHOUGH THESE PROBE WILL RESPOND TO HIGHER FREQUENCIES, READINGS WILL BE LESS ACCURATE. AC RESPONSE RISES WITH INCREASING FREQUENCY DUE TO THE INDUCTIVE PICKUP OF THE FLEX STRIP PATTERN. RESPONSE IS RELATIVELY FLAT TO 200Hz BUT INCREASES AT HIGHER FREQUENCIES.

FIGURE 2. TRANSVERSE THIN FILM PROBES REF [49] thru [52]

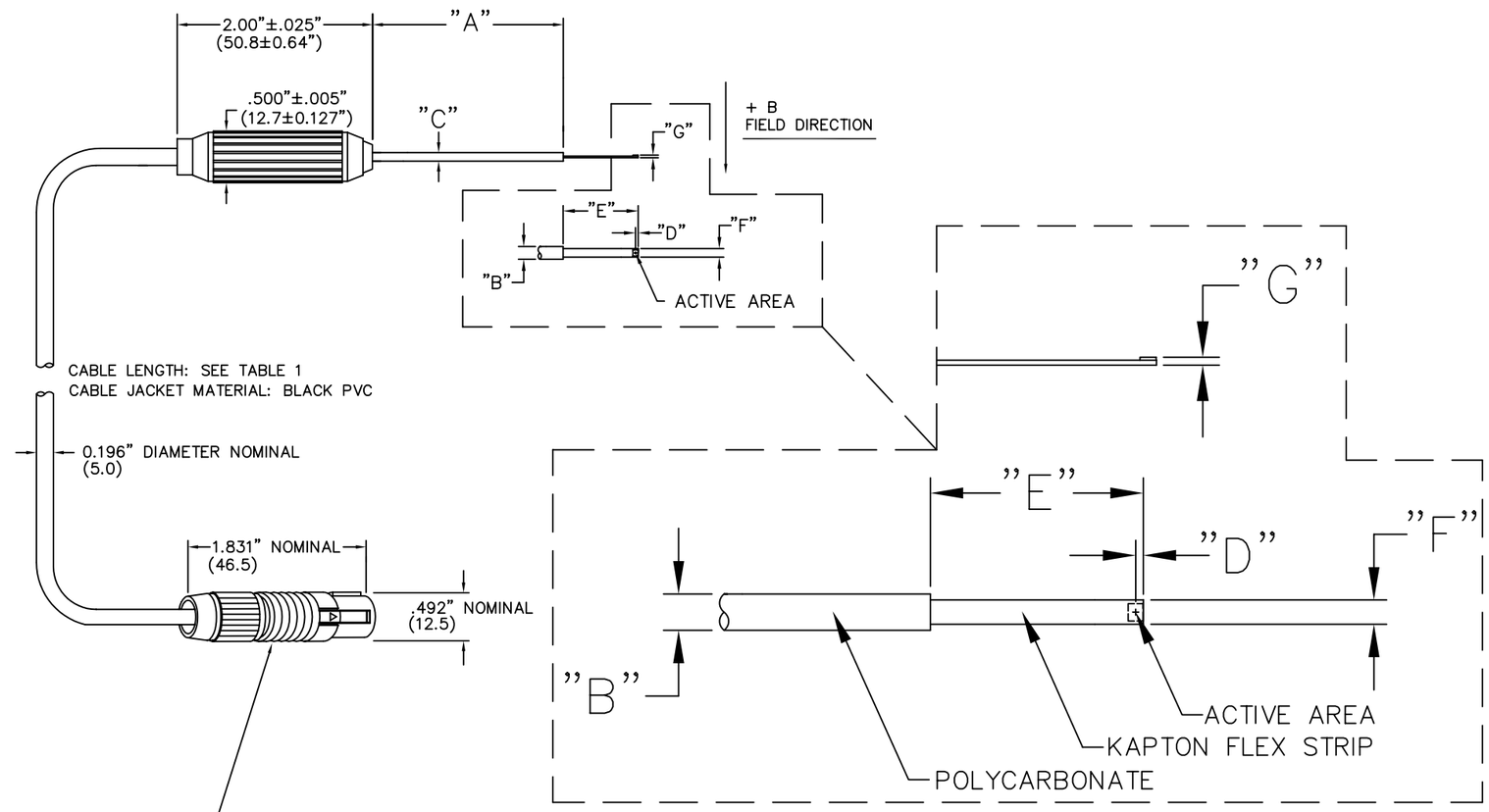


| REF | MODEL NO. | "A" | "B" | "C" | "D" | "E" | "F" | "G" (MAX) | MATERIAL | CORRECTED LINEARITY | SENS | ACTIVE AREA | OP. TEMP RANGE | TEMP. STABILITY ZERO | TEMP. STABILITY CAL | HALL DEVICE TYPE | FREQ. RESP. | TEMPERATURE COMPENSATED | CABLE LENGTH |
|---|---|---|---|---|---|---|---|---|---|---|---|---|---|---|---|---|---|---|---|
| 49,50 | STD81−0203−xx | 2.000" ±.063" | 0.157" ±.004" | 0.044" ±.004" | 0.020" ±0.002" | 1.000" ±0.063" | 0.061" ±0.003" | 0.020" | STEM BASE: POLYCARBONATE STEM TIP: KAPTON | 0.5%/30KG | 1X | 0.005" (0.127) DIA. (NOM) | 0°C TO +90°C | ±3μv/°C ±0.55 Gauss/°C (MAX) | −.07%/°C (MAX) | JB−1154 | DC TO 200 HZ | NO | 10 or 30 FT (3.04 or 9.14m) as noted by −XX suffix |
| 51,52 | STD81−0205−xx | 4.000" ±.063" | | | | | | | | | | | | | | | | | |

| REF | QTY | ITEM NO. | DRAWING NO. | DESCRIPTION |
|---|---|---|---|---|
| | | | | |

F.W. BELL

SHEET NO. 3 | DWG NO. U1-6276 | REV C

SPECIFICATIONS: AXIAL PROBES

1.0 GENERAL DESCRIPTION

8000 SERIES AXIAL PROBES ARE PRECISION, SEMICONDUCTOR MAGNETIC FIELD SENSORS DESIGNED FOR USE WITH F.W. BELL 8000 SERIES GAUSSMETERS TO PROVIDE STABLE AND REPEATABLE AXIAL MAGNETIC FLUX DENSITY MEASUREMENTS.

THESE UNITS FEATURE RUGGEDIZED CONSTRUCTION SUITABLE FOR MANUAL OR FIXTURED APPLICATIONS.

2.0 ELECTRICAL AND PHYSICAL SPECIFICATIONS

2.1 FOR SPECIFICATION DETAILS REFER TO TABLE 2 ON PAGE 9.

2.2 ELECTRICAL SCHEMATIC : REF [1]

2.3 STORAGE TEMPERATURE RANGE : −25°C TO +75°C (−13°F TO +167°F)

3.0 CALIBRATION & ACCURACY

3.1 CALIBRATION IS REFERENCED TO A LABORATORY STANDARD MAGNET. THIS STANDARD IS MEASURED BY THE NUCLEAR MAGNETIC RESONANCE (NMR) TECHNIQUE, WHICH IS BASED ON ACCEPTED VALUES OF NATURAL PHYSICAL CONSTANTS.

3.2 PROBES ARE CALIBRATED TO INDICATED ACCURACY OVER THE SPECIFIED RANGES WHEN USED WITH THE APPROPRIATE F.W. BELL GAUSSMETER.

3.3 GAUSSMETER ERRORS MUST BE ADDED TO PROBE LINEARITY ERRORS TO OBTAIN OVERALL MEASURING ACCURACY.

3.4 THIN FILM PROBES (SAD81−06xx) HAVE HIGHER NOISE AND SHORT TERM DRIFT (±.04G TYPICAL IN DC MODE) THAN BULK TYPES AND MAY BE LESS SUITABLE FOR SOME LOW LEVEL MEASURMENTS.

4.0 SPECIAL PROBES

4.1 ELECTRICAL AND/OR PHYSICAL REQUIREMENTS NOT COVERED BY STANDARD PROBES MAY BE FURNISHED AS SPECIAL PROBES.

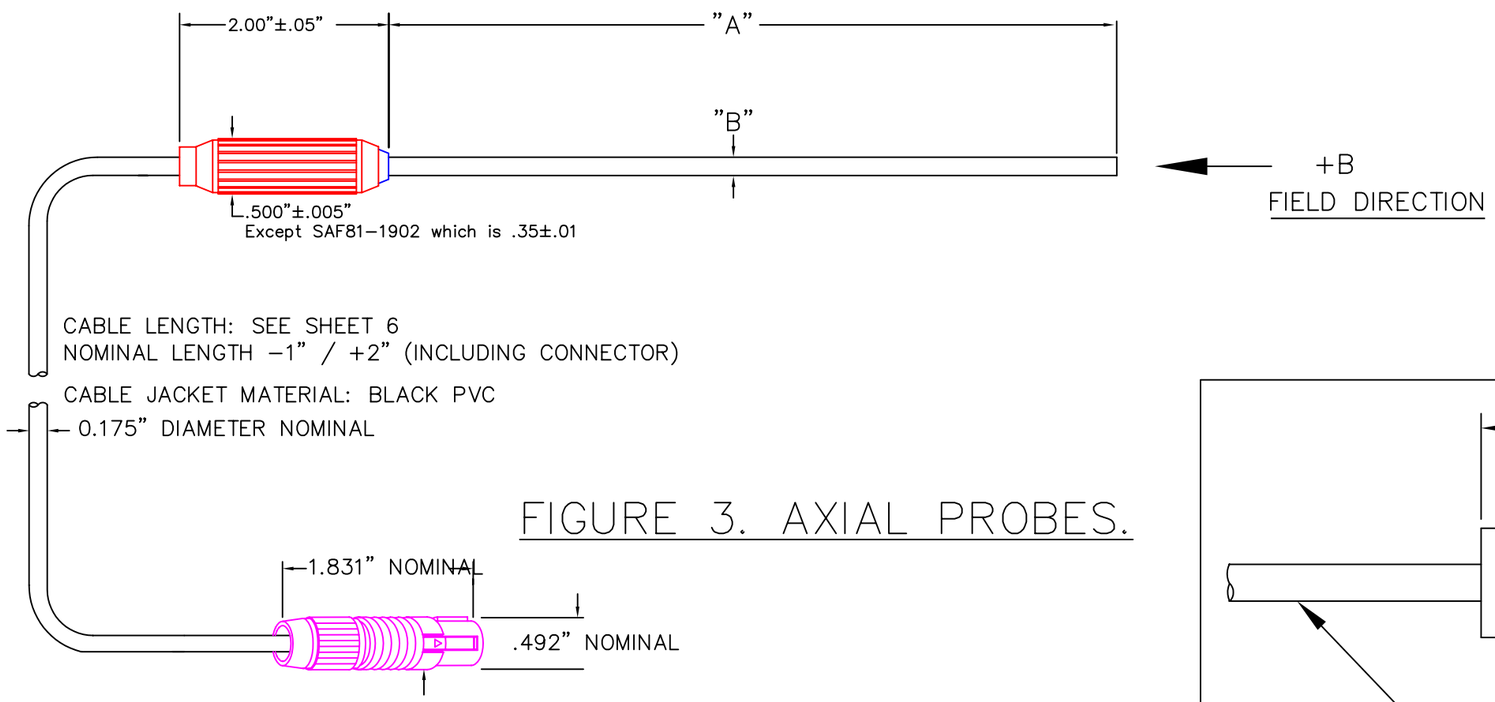


FIGURE 3. AXIAL PROBES.

CONNECTOR MANUFACTURER: NEUTRIK USA
INSERT: PA 6.6, BLACK COLOR, UL 94V−0 RATED, NEUTRIK P.N. MMI
HOUSING: CuZn39Pb3/ZnAl4Cu1 SATIN CHROMIUM PLATED, NEURIK P.N. MSC
CONTACTS: CuZn39Pb3/CuZn35Pb2/CuSn6 − 0.2um AuCo, NEUTRIK P.N. MPS

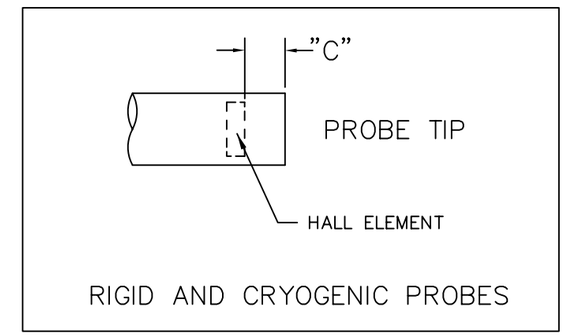


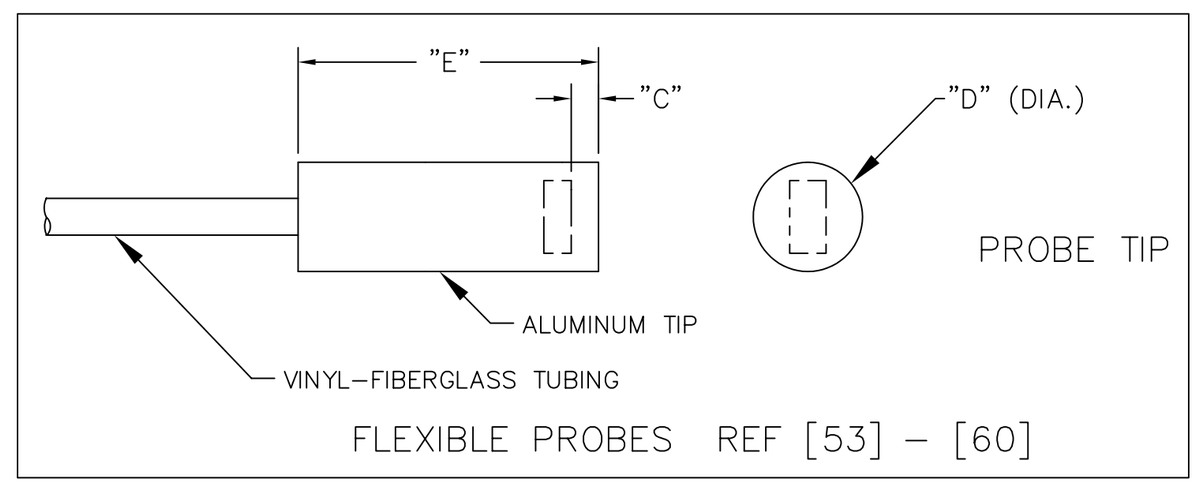


| REF | QTY | ITEM NO. | DRAWING NO. | DESCRIPTION | | |
|---|---|---|---|---|---|---|
| | | F.W. BELL | | SHEET NO. 4 | DWG NO. U1-6276 | REV C |

## SPECIFICATIONS MAGNA PROBE LOW FIELD PROBES

### GENERAL DESCRIPTION

1.0 THE 8000 SERIES MAGNA PROBES ARE A HALL EFFECT, FLUX MAGNIFIER TYPE OF FIELD SENSOR USEFUL FOR INDICATION, MEASUREMENT AND ANALYSIS OF WEAK MAGNETIC FIELDS WHEN UTILIZED WITH THE APPROPRIATE F.W. BELL GAUSSMETER. BOTH STATIC D.C. AND TIME–VARYING FIELDS CAN BE MEASURED WITH A 100 TIMES INCREASE IN SENSITIVITY. BOTH AMPLITUDE AND FIELD DIRECTION CAN BE OBTAINED AS WELL AS MEASUREMENTS OF SMALL CHANGES IN MAGNETIC FIELDS OF LOW AMPLITUDE AND GENERAL NOISE FIELD APPLICATION.

THE MAGNA PROBE IS DESIGNED FOR USE IN RELATIVELY UNIFORM, HOMOGENOUS MAGNETIC FIELDS (3 CU. FT. MIN) WHERE GRADIENTS ARE LOW WITH RESPECT TO PROBE DIMENSIONS.

2.0 ELECTRICAL AND PHYSICAL SPECIFICATIONS

2.1 DISPLAY RESOLUTION – 1μG ON 300mG RANGE, 10μG ON 3G RANGE
TYPICAL NOISE = 20μG (DC MODE), 180μG (AC MODE)

2.2 PROBE RANGE – 0 TO ±2 GAUSS

2.3 LINEARITY – ±0.5 % OF READING

2.4 RESIDUAL FLUX – ±2% OF F.S (F.S.= ±2 GAUSS)

2.5 FREQUENCY RESPONSE – DC TO 400 HERTZ

2.6 ELECTRICAL SCHEMATIC – REF [1]

2.7 STORAGE TEMP. RANGE – 0° TO + 75° C

2.8 WEIGHT – NET: 10 OZ
SHIPPING: 1 LB

3.0 CALIBRATION

3.1 CALIBRATION IS REFERENCED TO A LABORATORY STANDARD SOLENOID COIL. THIS STANDARD IS TRACEABLE TO INTERNATIONAL MAGNETIC LOW FIELD STANDARDS.

3.2 PROBES ARE CALIBRATED TO INDICATED ACCURACY OVER THE SPECIFIED GAUSS RANGE WHEN USED WITH THE APPROPRIATE F. W. BELL GAUSSMETER. USE BEYOND THESE RANGES WILL SHOW LINEARITY ERROR GREATER THAN THE SPECIFICATIONS.

3.3 GAUSSMETER ERRORS MUST BE ADDED TO PROBE LINEARITY ERRORS TO OBTAIN OVERALL MEASURING ACCURACY.

4.0 SPECIAL PROBES

4.1 ELECTRICAL AND/OR PHYSICAL REQUIREMENTS NOT COVERED BY STANDARD PROBES MAY BE FURNISHED AS SPECIAL PROBES.

## FIGURE 4. MOX Magna Probe

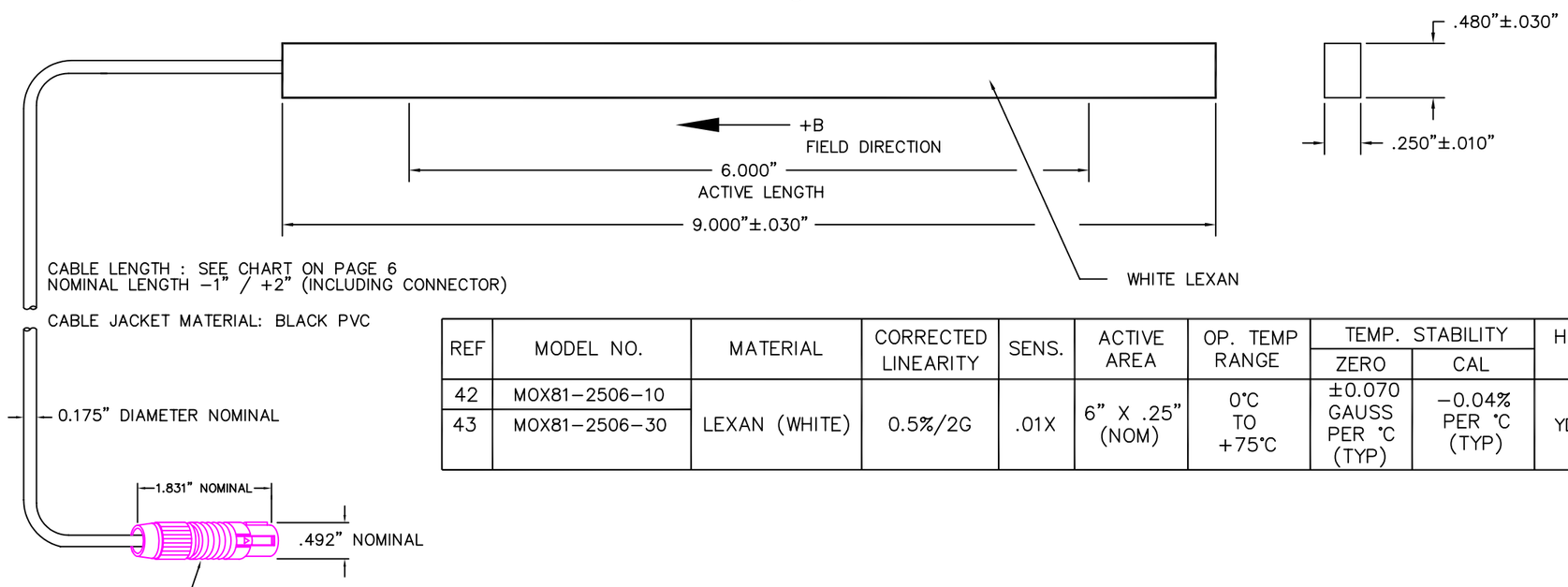


| REF | MODEL NO. | MATERIAL | CORRECTED LINEARITY | SENS. | ACTIVE AREA | OP. TEMP RANGE | TEMP. STABILITY | | HALL DEVICE TYPE | FREQUENCY RESPONSE | TEMPERATURE COMPENSATED |
|---|---|---|---|---|---|---|---|---|---|---|---|
| | | | | | | | ZERO | CAL | | | |
| 42 | MOX81–2506–10 | LEXAN (WHITE) | 0.5%/2G | .01X | 6" X .25" (NOM) | 0°C TO +75°C | ±0.070 GAUSS PER °C (TYP) | –0.04% PER °C (TYP) | YD–2381–008 | DC TO 400 HERTZ | NO |
| 43 | MOX81–2506–30 | | | | | | | | | | |

| REF | QTY | ITEM NO. | DRAWING NO. | DESCRIPTION | | |
|---|---|---|---|---|---|---|
| F.W. BELL | | | | SHEET NO. 5 | DWG NO. U1-6276 | REV C |

# SPECIFICATIONS LOW FIELD AXIAL PROBE

## GENERAL DESCRIPTION

1.0 THE MOS81–3204 LOW FIELD PROBE IS A MINIATURE FLUXGATE MAGNETOMETER WITH HIGH RESOLUTION USEFUL FOR INDICATION, MEASUREMENT, AND ANALYSIS OF WEAK MAGNETIC FIELDS WHEN UTILIZED WITH APPROPRIATE F.W. BELL GAUSSMETER. BOTH STATIC D.C. AND TIME–VARYING FIELDS CAN BE MEASURED WITH GREATLY INCREASED RESOLUTION COMPARED TO STANDARD 1X PROBE. BOTH AMPLITUDE AND FIELD DIRECTION CAN BE OBTAINED AS WELL AS MEASUREMENTS OF SMALL CHANGES IN MAGNETIC FIELDS OF LOW AMPLITUDE AND GENERAL NOISE FIELD APPLICATION. THE LOW FIELD PROBE IS DESIGNED FOR USE IN RELATIVELY UNIFORM, HOMOGENOUS MAGNETIC FIELDS (0.25 CU. FT. MINIMUM) WHERE GRADIENTS ARE LOW WITH RESPECT TO PROBE DIMENSIONS.

THIS PROBE HAS NO FERROUS CONCENTRATORS AND THEREFORE VIRTUALLY NO MAGNETIC HYSTERISIS WHICH MAY BE A PROBLEM WITH THE MOX TYPE MAGNAPROBE IN SOME APPLICATIONS.

## 2.0 ELECTRICAL AND PHYSICAL SPECIFICATIONS

2.1 DISPLAY RESOLUTION – 10μG, TYPICAL NOISE; 20μG (DC MODE), 50μG (AC MODE)

2.2 PROBE RANGE – 0 TO ±1 GAUSS DC or peak AC

2.3 LINEARITY – ±0.5 % OF READING AT 23°C

2.4 FREQUENCY RESPONSE – DC TO 750 Hz (–3dB point typical)

2.5 STORAGE TEMPERATURE – –40° TO + 85° C

2.6 WEIGHT – NET: 5 OZ
SHIPPING: 1 LB

## 3.0 CALIBRATION

3.1 CALIBRATION IS REFERENCED TO A STANDARD LABORATORY SOLENOID COIL. THIS COIL IS TRACEABLE TO INTERNATIONAL MAGNETIC LOW FIELD STANDARDS.

3.2 PROBES ARE CALIBRATED TO INDICATED ACCURACY OVER THE SPECIFIED FIELD LEVELS WHEN USED WITH THE APPROPRIATE F. W. BELL GAUSSMETER. USE BEYOND THESE LEVELS WILL SHOW LINEARITY ERROR GREATER THAN THE SPECIFICATIONS.

3.3 GAUSSMETER ERRORS MUST BE ADDED TO PROBE LINEARITY ERRORS TO OBTAIN OVERALL MEASURING ACCURACY.

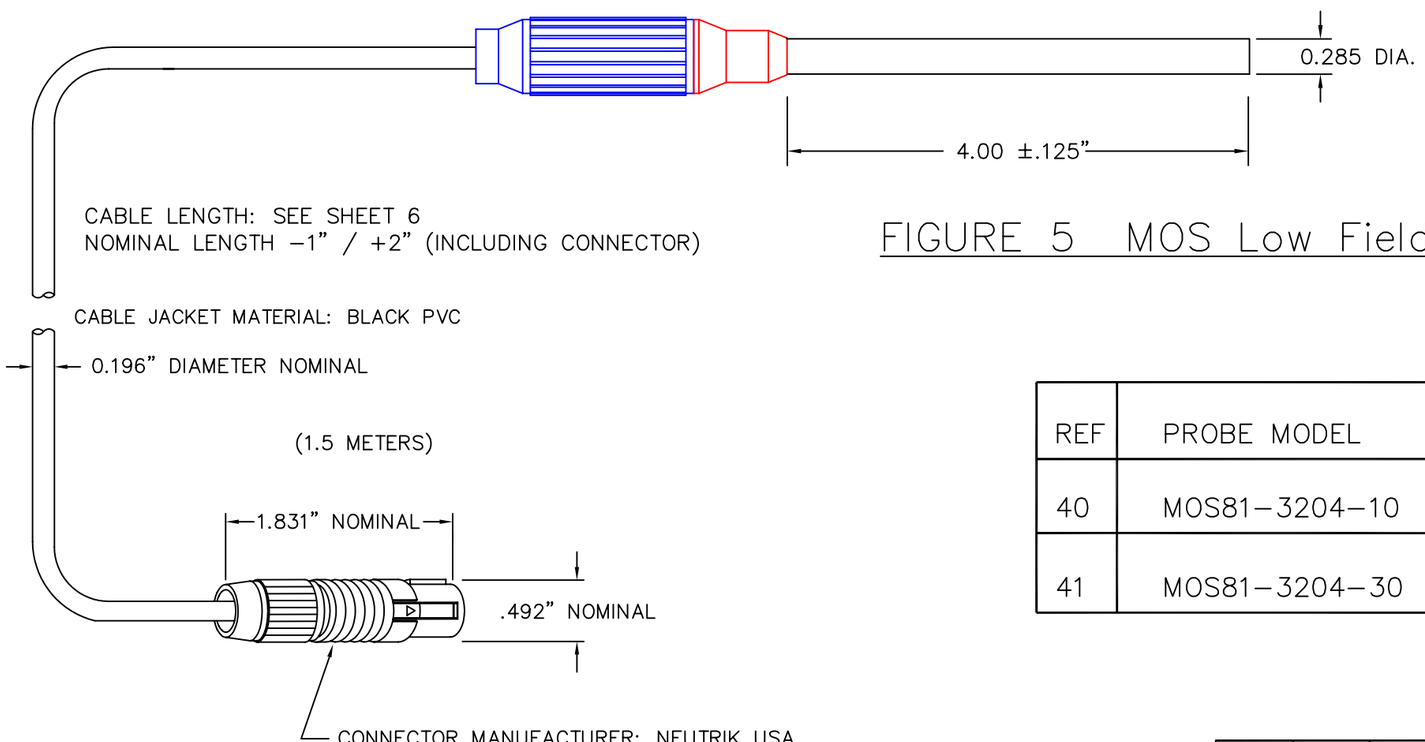


FIGURE 5 MOS Low Field Probe

| REF | PROBE MODEL | ACTIVE AREA | OP. TEMP RANGE | TEMP. STABILITY | |
|---|---|---|---|---|---|
| | | | | ZERO | CAL |
| 40 | MOS81–3204–10 | .024in 2 | 0°C TO +75°C | ±0.0005 GAUSS/°C | –0.05 %/°C |
| 41 | MOS81–3204–30 | | | | |

| REF | QTY | ITEM NO. | DRAWING NO. | DESCRIPTION | | |
|---|---|---|---|---|---|---|
| | | F.W. BELL | | SHEET NO. 6 | DWG NO. U1-6276 | REV C |

# PROBE MODEL CHARACTER DEFINITION

For reference example only. Not all combinations are possible or presently in production.

## HTF81-0608-10-T

**PROBE STYLE**

S – STANDARD
H – HEAVY DUTY
F – FLEXIBLE STEM
P – PHENOLIC
C – CRYOGENIC
M – MAGNA PROBE
Z – 3 AXIS

**PROBE TYPE**

A – AXIAL
T – TRANSVERSE
0 – NOT APPLICABLE

**ELECTRICAL PERFORMANCE**

| | | | |
|---|---|---|---|
| A – | 0.25% | 10kG | 1X |
| C – | 0.5% | 10kG | 1X |
| D – | 0.5% | 30kG | 1X |
| F – | 0.25% | 30kG | 1X |
| M – | 0.15% | 30kG | 10X |
| P – | 1.00% | 30kG | 10X |
| R – | 1.00% | 100kG | 10X |
| U – | 2.00% | 100kG | 10X |
| X – | 0.5% | 2G | .01X |
| S – | 0.5% | 1G | .001X |

**8000 SERIES GAUSSMETER**

81 – 1-AXIS
83 – 3-AXIS

**PROBE STEM OUTSIDE DIAMETER or THICKNESS**

AXIAL
06 – .060 INCH
12 – .120 INCH
18 – .180 INCH
19 – .187 INCH
25 – .250 INCH
32 – .312 INCH

TRANSVERSE
02 – .020 INCH
04 – .040 INCH
06 – .060 INCH

**PROBE STEM LENGTH**

02 – 2 INCH
04 – 4 INCH
06 – 6 INCH
08 – 8 INCH
60 – 60 INCH

**CABLE LENGTH**

10 – 10 FEET
30 – 30 FEET

**TEMPERATURE COMPENSATION**

T – YES
BLANK – NO

For XOVNK–00xx Extension cables, 00xx= length in feet,
–available in 5, 10, 15 and 20 foot lengths.

NOTES:

1. Electrical Performance defined as:
   a. xx% = Corrected Linearity deviation over specified range.
      Initial absolute accuracy at the calibration reference point is typically <50% of this value.
   b. xxkG = ±Magnetic flux density range for specified accuracy; for example –30kG to +30kG
   c. 1X, 10X etc. = Relative sensitivity factor defined by internal sensor material or configuration.
      For reference only. All range scaling is automatically performed by the gaussmeter.
2. MOS model probes are 0.5% to ±1G for 8000 series, compared to 1.0% for others such as the 5100 Series.

| REF | QTY | ITEM NO. | DRAWING NO. | DESCRIPTION | | |
|---|---|---|---|---|---|---|
| | | F.W. BELL | | SHEET NO. 7 | DWG NO. U1-6276 | REV C |

# TABLE 1. ELECTRICAL SPECIFICATIONS FOR TRANSVERSE PROBES

| REF | MODEL NO. | INCHES (see sheet 2) "A" ±.063 | "B" | "C" | "D" | STEM MATERIAL | CORRECTED LINEARITY | SENS | ACTIVE AREA ±.002" | OP. TEMP RANGE | UNCOMPENSATED TEMP. STABILITY ZERO (GAUSS/°C) TYPICAL | CAL (%/°C) TYPICAL | HALL DEVICE TYPE | *** FREQ. RESPONSE DC TO: | TEMPERATURE COMPENSATED |
|---|---|---|---|---|---|---|---|---|---|---|---|---|---|---|---|
| 2 | HTF81–0604–10 | 4 | 0.180 ±.003 | 0.060 +.000 –.004 | 0.150 ±0.020 | ALUMINUM | 0.25%/30kG | 1X | 0.070" DIA. | 0°C TO +75°C | ±0.090 | –0.040 | YD–2381–003 | 20 kHz | NO |
| 3 | HTF81–0604–10–T | | | | | | | | | | | | YB–3913–001 | | YES * |
| 4 | HTF81–0608–10 | 8 | | | | | | | | | | | YD–2381–003 | | NO |
| 5 | HTF81–0608–10–T | | | | | | | | | | | | YB–3913–001 | | YES * |
| 6 | HTM81–0608–10 | | | | | | 0.15%/30kG | 10X | 0.040" | | ±0.130 | ±0.005 | YD–2381–005 | 400 Hz | NO |
| 7 | HTM81–0608–10–T | | | | | | | | | | | | YB–3913–007 | | YES * |
| 11 | STF81–0404–10 | 4 | 0.159 ±.004 | 0.046 ±.004 | | ** POLY–CARBONATE | 0.25%/30kG | 1X | 0.070" DIA. | | ±0.090 | –0.040 | YB–3913–005 | 20 kHz | NO |
| 12 | STF81–0404–10–T | | | | | | | | | | | | YB–3913–006 | | YES * |
| 8 | STF81–0402–10 | 2 | | | | | | | | | | | YB–3913–005 | | NO |
| 9 | STF81–0402–10–T | | | | | | | | | | | | YB–3913–006 | | YES * |
| 10 | STF81–0402–30–T | | | | | | | | | | | | | | |
| 13 | STM81–0402–10 | | | | | | 0.15%/30kG | 10X | 0.040" DIA. | | ±0.130 | ±0.005 | YB–3913–008 | 400 Hz | NO |
| 14 | STM81–0402–10–T | | | | | | | | | | | | YB–3913–007 | | YES * |
| 15 | STM81–0404–10 | 4 | | | | | | | | | | | YB–3913–008 | | NO |
| 16 | STM81–0404–10–T | | | | | | | | | | | | YB–3913–007 | | YES * |
| 48 | HTR81–0608–10 | 8 | 0.180 ±.003 | 0.060 +.000 –.004 | | ALUMINUM | 1.0%/100kG | | | | | | YD–2381–003 | | NO |
| | | | | | | | | | | | | | | | NO |
| 38 | CTP81–3260–10 | 60 | 0.312 ±.005 (DIAMETER) | N/A | 0.320 ±0.063 | STAINLESS STEEL | 2.0%/100kG | 10X | 0.040" DIA. | –269°C TO +75°C | ±0.130 | ±0.010 | YD–2381–007 | DC ONLY | NO |
| | | | | | | | 1.0%/30kG | | | | | | | | |

| REF | MODEL NO. | INCHES (see sheet 2) "A" ±.063 | "B" | "C" | "D" | "E" | "F" | "G" | "H" | "I" | "J" | STEM MATERIAL | CORRECTED LINEARITY | SENS | ACTIVE AREA | OP. TEMP RANGE | UNCOMPENSATED TEMP. STABILITY ZERO (GAUSS/°C) TYPICAL | CAL (%/°C) TYPICAL | HALL DEVICE TYPE | FREQ. RESP. | TEMPERATURE COMPENSATED |
|---|---|---|---|---|---|---|---|---|---|---|---|---|---|---|---|---|---|---|---|---|---|
| 17 | STF81–0204–10 | 4 | 0.155 ±.005 | 0.046 ±.004 | 0.130 ±0.008 | 0.375 ±0.063 | 0.130 ±0.003 | 0.020 ±0.003 | N/A | N/A | N/A | FLEXIBLE RUBBER (EXPOSED ELEMENT) | 0.25%/30KG | 1X | 0.070" DIA. (NOM) | 0 TO +75°C | ±0.090 | –0.040 | YD–2381–003 | DC TO 20 KHz | NO |
| 18 | STF81–0204–10–T | | | | | | | | 0.053" ±0.005" | 0.025" ±0.003" | 0.192" ±0.032" | | | | | | | | YB–3913–006 | | |
| | | | | | | | | | | | | | | | | | | | | | |
| 61 | FTF81–0215–10 | 15 | 0.100 ±.005 | N/A | | | | | N/A | N/A | N/A | VINYL FIBERGLASS STEM (EXPOSED ELEMENT) | | | | | | | YD–2381–004 | | |
| 63 | FTF81–0215–30 | | | | | | | | | | | | | | | | | | | | |
| 62 | FTF81–0215–10–T | | | | | | | | 0.053 ±0.005 | 0.025 ±0.003 | 0.192 ±0.032 | | | | | | | | YB–3913–009 | | YES * |
| 64 | FTF81–0215–30–T | | | | | | | | | | | | | | | | | | | | |
| 65 | FTM81–0215–10 | | | | | | | | N/A | N/A | N/A | | 0.15%/30KG | 10X | 0.040" DIA. (NOM) | | ±0.130 | ±0.005 | YD–2381–006 | DC TO 400 Hz | NO |
| 67 | FTM81–0215–30 | | | | | | | | | | | | | | | | | | | | |
| 66 | FTM81–0215–10–T | | | | | | | | 0.053 ±0.005 | 0.025 ±0.003 | 0.192 ±0.032 | | | | | | | | YB–3913–010 | | YES * |
| 68 | FTM81–0215–30–T | | | | | | | | | | | | | | | | | | | | |

*Temperature Compensated probes have reduced error associated with changes in probe tip temperature. The amount of improvement varies somewhat depending on probe type, with typical results as follows:

| Probe Type | Calibration | Zero Offset |
|---|---|---|
| 1X Probes | –.02%/°C | ±0.06G/°C (±6mT/°C) |
| 10X Probes | –.003%/°C | ±0.085G/°C (±8.5mT/C) |

** From 2012 to 2015 these probes were polypropylene (.156 x .042"). In 2015 and early 2016 they were fiberglass (.159 x .046).

*** AC perfomance may be affected by the amount of probe stem, body or cable exposed to an AC magnetic field. Probes are calibrated with only the tip (approximately 0.5") exposed to the AC field.

| REF | QTY | ITEM NO. | DRAWING NO. | DESCRIPTION | | |
|---|---|---|---|---|---|---|
| | | F.W. BELL | | SHEET NO. 8 | DWG NO. U1-6276 | REV C |

# TABLE 2. ELECTRICAL SPECIFICATIONS FOR AXIAL PROBES

| REF | MODEL NO. | INCHES "A" ±.063 | "B" | "C" | "D" | "E" | STEM MATERIAL | CORRECTED LINEARITY | SENS | ACTIVE AREA (NOM. DIA.) | OP. TEMP RANGE | UNCOMPENSATED TEMP. STABILITY ZERO (GAUSS/°C) TYPICAL | CAL (%/°C) TYPICAL | HALL DEVICE TYPE | ** FREQ. RESPONSE DC TO: | TEMPERATURE COMPENSATED |
|---|---|---|---|---|---|---|---|---|---|---|---|---|---|---|---|---|
| 20 | HAF81–2504–10 | 4 | 0.250 ±.005 | 0.015 ±.004 | | | ALUMINUM 3003 3/4 FH | 0.25%/30kG | 1X | 0.030" | 0°C TO +75°C | ±0.090 | –0.040 | YD–2384–004 | 20 kHz | NO |
| 21 | HAF81–2504–10–T | | | | | | | | | | | | | YB–3913–002 | | YES * |
| 22 | HAF81–2508–10 | 8 | | | | | | | | | | | | YD–2384–004 | | NO |
| 23 | HAF81–2508–10–T | | | | | | | | | | | | | YB–3913–002 | | YES * |
| 24 | HAM81–2504–10 | 4 | | | | | | 0.15%/30kG | 10X | | | ±0.130 | ±0.005 | YD–2384–010 | 400 HZ | NO |
| 25 | HAM81–2504–10–T | | | | | | | | | | | | | YB–3913–011 | | YES * |
| 26 | HAM81–2508–10 | 8 | | | | | | | | | | | | YD–2384–010 | | NO |
| 27 | HAM81–2508–10–T | | | | | | | | | | | | | YB–3913–011 | | YES * |
| 28 | SAF81–1904–10 | 4 | 0.187 +.002 –.007 | | | | | 0.25%/30kG | 1X | | | ±0.090 | –0.040 | YD–2384–007 | 20 kHz | NO |
| 29 | SAF81–1904–10–T | | | | | | | | | | | | | YB–3913–003 | | YES * |
| 30 | SAF81–1908–10 | 8 | | | | | | | | | | | | YD–2384–007 | | NO |
| 31 | SAF81–1908–10–T | | | | | | | | | | | | | YB–3913–003 | | YES * |
| 32 | SAF81–1902–10–T | 2 | | | | | | | | | | | | | | YES * |
| 33 | SAM81–1904–10 | 4 | | | | | | 0.15%/30kG | 10X | | | ±0.130 | ±0.005 | YD–2384–013 | 400 HZ | NO |
| 34 | SAM81–1904–10–T | | | | | | | | | | | | | YB–3913–012 | | YES * |
| 35 | SAM81–1908–10 | 8 | | | | | | | | | | | | YD–2384–013 | | NO |
| 36 | SAM81–1908–10–T | | | | | | | | | | | | | YB–3913–012 | | YES * |
| 46 | HAR81–2508–10 | | 0.250 ±.005 | | | | | 1%/100kG | | | | | | YD–2384–030 | | NO |
| | | | | | | | | | | | | | | | | |
| 47 | SAR81–1908–10 | | 0.187 +.002 –.007 | | | | | | | | | | | YD–2384–033 | | |
| | | | | | | | | | | | | | | | | |
| | | | | | | | | | | | | | | | | |
| 69 & 70 | SAD81–0604–10, –30 | 4 | .058±.002 | .011±.001 | | | CARBON FIBER | 0.5%/30kG | 1X | .005" | –20 TO +100°C | ±1.0 | –.07 | JB–1158–02 | 50kHz | |
| 71 & 72 | SAD81–0608–10, –30 | 8 | | | | | | | | | | | | | | |
| 73 & 74 | SAC81–1204–10, –30 | 4 | .118±.002 | .005±.002 | | | CARBON FIBER | 0.5%/10kG | 1X | .030" | 0 TO +75°C | ±.090 | –.07 | JB–0204–01 | 20kHz | |
| 75 & 76 | SAC81–1208–10, –30 | 8 | | | | | | | | | | | | | | |
| 39 | CAP81–2560–10 | 60 | 0.250 ±.005 | 0.250 ±0.063 | | | STAINLESS STEEL | 1.0%/30kG | 10X | 0.030" | –269°C TO +75°C | ±0.130 | –0.010 | YD–2384–016 | DC ONLY | |
| 53 | FAF81–1815–10 | 15.0 ±.125 | 0.100 ±.005 | 0.015 ±.015 | 0.180 +0.002 –0.004 | 1.00 ±0.010 | VINYL FIBERGLASS STEM (ALUMINUM TIP) | 0.25%/30KG | 1X | 0.030" DIA. (NOM) | DC TO +75°C | ±0.090 | –0.040 | YD–2384–008 | DC TO 20 KHz | NO |
| 55 | FAF81–1815–30 | | | | | | | | | | | | | YB–3913–013 | | YES * |
| 54 | FAF81–1815–10–T | | | | | | | | | | | | | | | |
| 56 | FAF81–1815–30–T | | | | | | | | | | | | | | | |
| 57 | FAM81–1815–10 | | | | | | | 0.15%/30KG | 10X | | | ±0.130 | ±0.005 | YD–2384–014 | DC TO 400 Hz | NO |
| 59 | FAM81–1815–30 | | | | | | | | | | | | | YB–3913–014 | | YES * |
| 58 | FAM81–1815–10–T | | | | | | | | | | | | | | | |
| 60 | FAM81–1815–30–T | | | | | | | | | | | | | | | |

*Temperature Compensated probes have reduced error associated with changes in probe tip temperature. The amount of improvement varies somewhat depending on probe type, with typical results as follows:

| Probe Type | Calibration | Zero Offset |
|---|---|---|
| 1X Probes | –.02%/°C | ±0.06G/°C (±6mT/°C) |
| 10X Probes | –.003%/°C | ±0.085G/°C (±8.5mT/C) |

** AC perfomance may be affected by the amount of probe stem, body or cable exposed to an AC magnetic field. Probes are calibrated with only the tip (approximately 0.5") exposed to the AC field.

| REF | QTY | ITEM NO. | DRAWING NO. | DESCRIPTION | | |
|---|---|---|---|---|---|---|
| | | F.W. BELL | | SHEET NO. 9 | DWG NO. U1-6276 | REV C |